Advantages:

No need for lubrication
No contamination risk
Excellent performance under
both pressure and vacuum conditions
Custom design
Easily repairable
Low cost maintenance
No dimensional limits

Can be used for:

Mixers
Defrosters
Pumps
Screw Compressors
Dryers
Cooking tanks
All kinds of rotating equipment

d1	d2	B
8,0	18,0	5,0
10,0	22,0	6,0
12,0	28,0	8,0
15,0	30,0	8,0
16,0	30,0	8,0
17,0	28,0	8,0
17,0	35,0	8,0
20,0	35,0	8,0
22,0	40,0	8,0
25,0	35,0	8,0
25,0	42,0	8,0
25,0	52,0	7,0
28,0	47,0	10,0
30,0	47,0	10,0
32,0	47,0	8,0
32,0	47,0	10,0
35,0	47,0	8,0
35,0	50,0	10,0
38,1	63,5	12,7
40,0	55,0	10,0
40,0	60,0	10,0
40,0	62,0	10,0
40,0	68,0	10,0
42,0	62,0	8,0
42,0	60,0	10,0

d1	d2	B
45,0	62,0	10,0
45,0	65,0	10,0
48,0	65,0	10,0
50,0	65,0	10,0
50,0	70,0	10,0
50,0	72,0	10,0
55,0	72,0	10,0
60,0	75,0	8,0
60,0	80,0	10,0
62,0	80,0	10,0
65,0	85,0	10,0
70,0	90,0	10,0
73,0	100,0	10,0
75,0	100,0	10,0
75,0	95,0	13,0
80,0	100,0	10,0
85,0	120,0	12,7
90,0	110,0	10,0
95,0	120,5	12,0
100,0	130,0	13,0
110,0	140,0	13,0
120,0	150,0	12,0
140,0	165,0	10,0
150,0	180,0	12,0

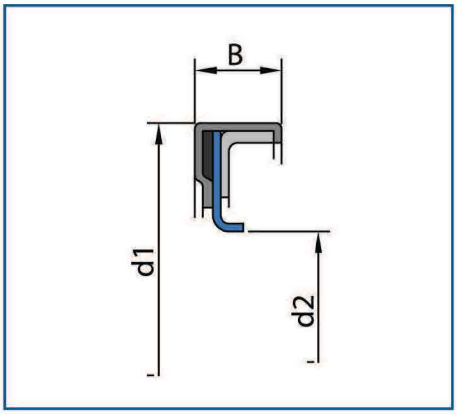

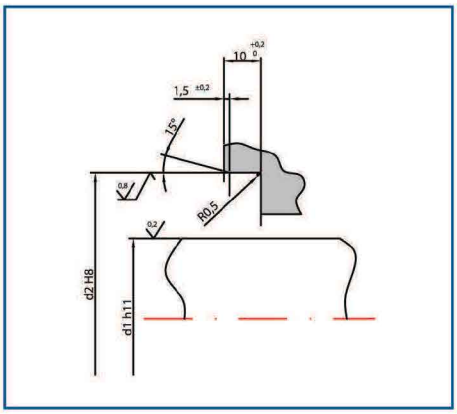

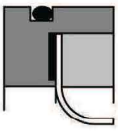

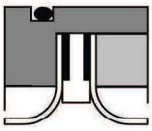

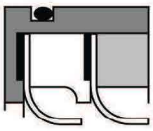

Our Lip Seals are the answer to all our Customers' sealing problems.
The majority of rotating equipments in the Food and Pharmaceutical industries operate at low speed, mostly by packing the sealing system still, because installing a conventional mechanical seal will only cause an increase in costs.
Our Lip Seals are middle ground between the two standard solutions, they are also easy to install and maintain, and also repairable and custom made, in order to avoid any modifications on our Customers' already existing equipment.

INFLA-Sealing
INFLASEALING S.r.l.s. C.F./P.IVA3904321209
Via Rosignanina, 32 - 56040 Santa Luce (Pisa)
Tel.:+39.050.6917.01 - Fax +39.050.6919.01 - info@inflasealing.com